Fernco Inc.
300 S. DAYTON ST.
DAVISON, MI 48423
PH: 810-653-9626
FAX:810-654-2616

1070-33

DESCRIPTION:

# Corrugated Pipe Coupling

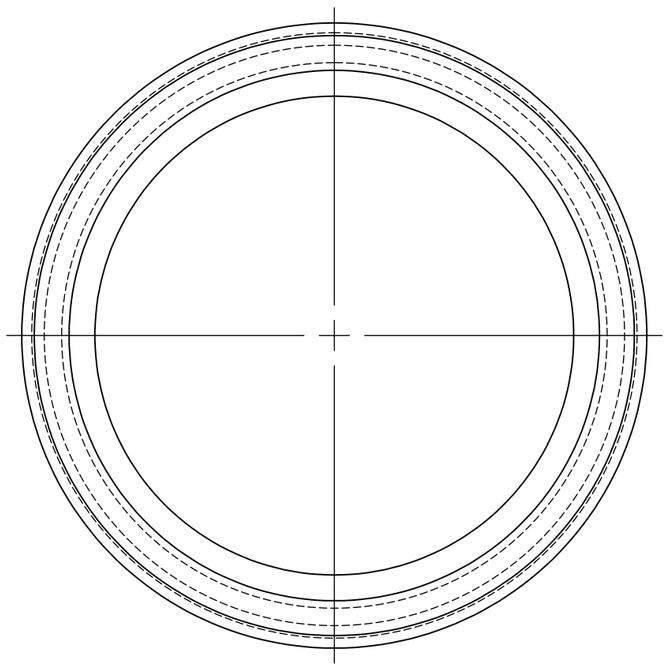

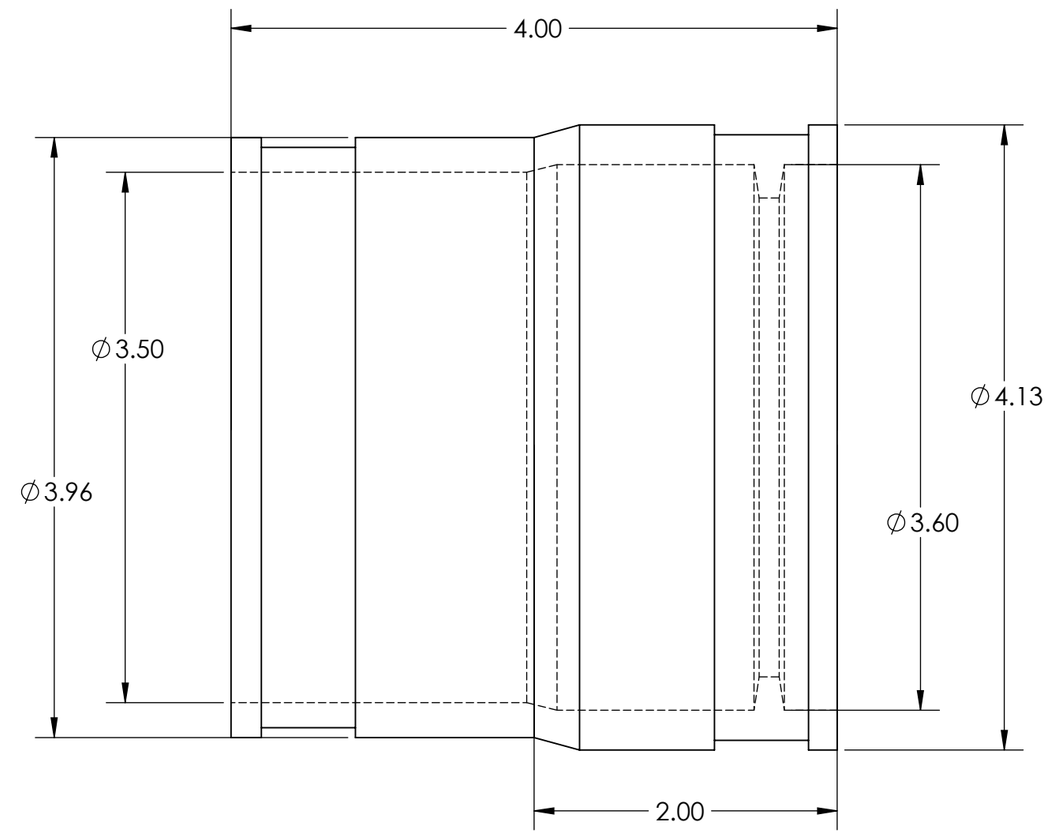


**PROPRIETARY AND CONFIDENTIAL**
**THE INFORMATION CONTAINED IN THIS DRAWING IS THE SOLE PROPERTY OF** FERNCO, INC. ANY REPRODUCTION IN PART OR AS A WHOLE WITHOUT THE WRITTEN PERMISSION OF FERNCO, INC. IS PROHIBITED.

TOLERANCES:
Fractional ± xxx"
.XX= ±.xxx
ANG.= ±x°
UNLESS OTHERWISE SPECIFIED

| | | | |
|---|---|---|---|
| *Part Weight* | | *Installation Torque* | 60" Lbs./see coupling |
| Min\Max Temp. | -30/140 Degrees F | *Conforms to ASTM* | D5926, C1173 |
| *Pressure Tested* | 4.3 PSI | *Clamps used* | 300 Series Stainless |
| *Material* | Flexible PVC 60 Duro Shore A | | |

UNITS: INCHES
SIZE: **A**
3RD ANGLE PROJECTION
DO NOT SCALE DRAWING

DESIGNER: T. Oistad
CHECKER:
DATE: 8/30/2013
SCALE: not to scale
SHEET 1 OF 1